Function Flow:

The system is provided with 2 keys and 3 LEDS

- Keys
  - Selection keys
  - Navigation keys
- LED
  - Green- Motor LED- motor run indication
  - Amber-Pause LED- mode pause indication
  - Red- Fault LED – Fault indication

INITIAL SCREEN:

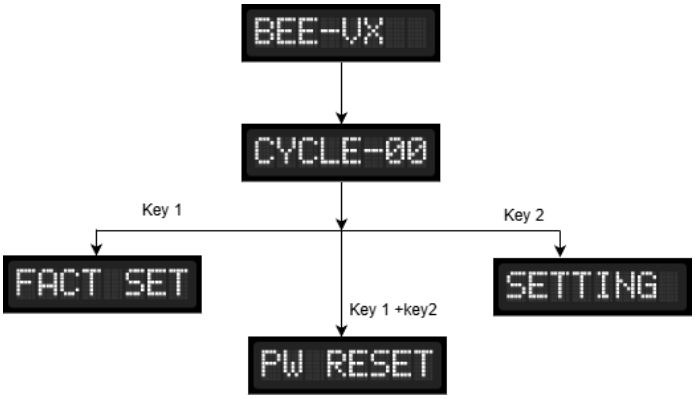

Initially: The system retrieves the Default mode and check for the home position Where the screen will display number of cycles from Default mode.

Key operation:

- Pressing **Key1** navigates the user to the **Factory Settings** menu.
- A **short press of Key2** displays the current setting.
- A **long press of Key2** allows the user to modify the selected setting.
- Pressing **Key1 and Key2 simultaneously** initiates the **Password Reset** process.

Factory setting:

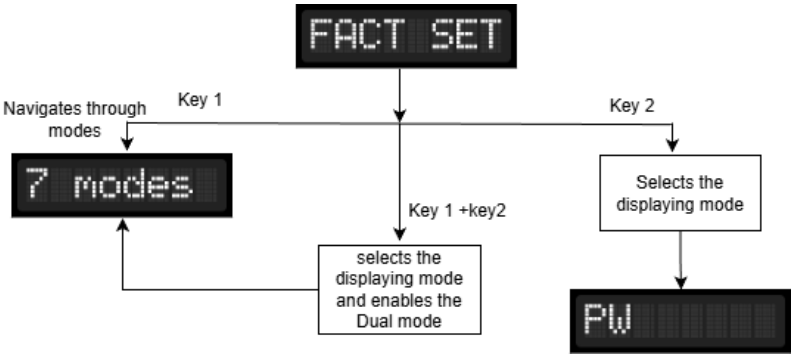

Seven modes:

- Pressing **Key1** cycles sequentially through all seven available operating modes displayed on the screen.
- Pressing **Key1 and Key2 simultaneously** selects the currently displayed mode as the **primary mode** and allows the user to select a **second mode**, thereby activating **Dual Mode** operation.
  Dual Mode is supported **only** for **Single Point Stand-Alone** and **Multi Point Stand-Alone** modes. For all other modes, the **Key1 + Key2** action has no effect and Dual Mode will not be enabled.
- Pressing **Key2** selects the currently displayed mode and prompts the user to either **create a new password** or **enter an existing password**, depending on the current system state.

Password Creation, Reset Procedure and Entry:

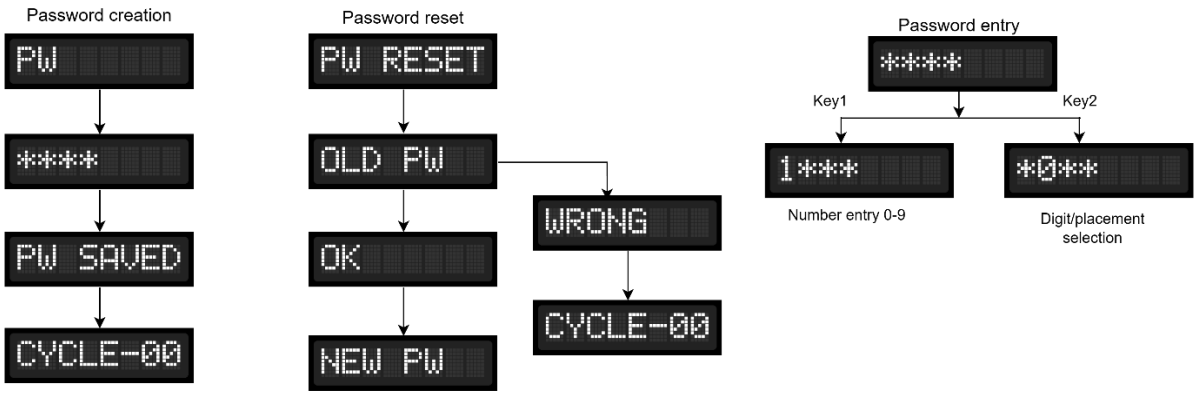

1. Password Creation

- When password creation is initiated, the display shows **"PW"**.
- The user enters the desired password using **number entry (0–9)**.
- After successful entry, the system stores the password and displays **"PW SAVED"**.
- Once the password is saved, the system automatically returns to the **Home Screen** (e.g., **"CYCLE-00"**).

2. Password Reset

- When the **Password Reset** function is initiated, the display shows **"PW RESET"**.
- The system prompts the user to enter the **existing password**, displayed as **"OLD PW"**.
- If the entered old password is **valid**, the system displays **"OK"** to confirm verification and proceeds to prompt the user to enter a **new password** (displayed as **"NEW PW"**).
- If the entered old password is **invalid**, the system displays **"WRONG"** and returns to the previous operation without allowing password reset.
- Upon successful entry and storage of the new password, the system updates the password and returns to the **Home Screen**.

3. Password Entry

- When password entry is required, the display shows masked characters (e.g., **"****"**).
- **Key1** is used for **numeric entry (0–9)**.
- **Key2** is used for **digit/placement selection** within the password.
- After the complete password is entered, the system validates the password:
  - If the password is correct, access is granted and the system proceeds to the requested operation.
  - If the password is incorrect, the user is prompted to re-enter the password.

User setting:

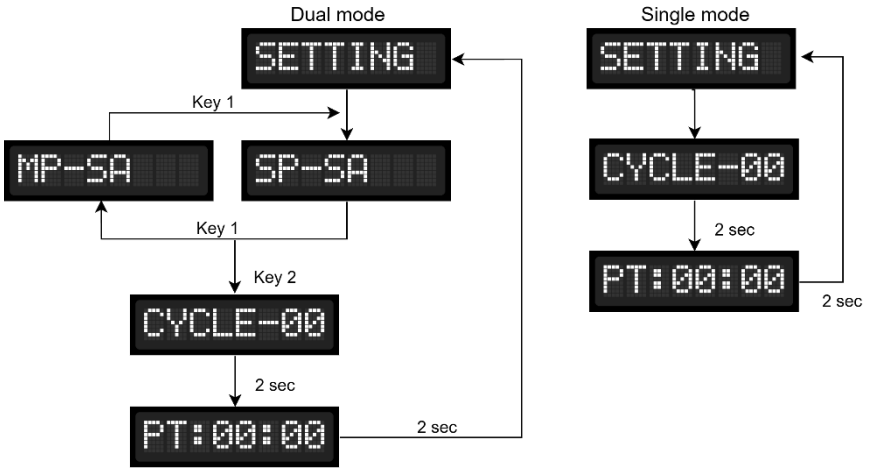

Mode Selection (Dual Mode Only)

- **"MP-SA"**: Represents the **Multi Point Stand-Alone** mode.
- **"SP-SA"**: Represents the **Single Point Stand-Alone** mode.
- **Key Interaction:**
  - **Key1**: Navigates between the two modes (**MP-SA ↔ SP-SA**).
  - **Key2**: Selects the currently displayed mode and enters the cycle setting.

Cycle Setting

- **Key1 (Increment):** Increases the cycle count.
- **Key2 (Decrement):** Decreases the cycle count.
- **Timeout / No Key Action:** If no key is pressed for 2 seconds, the system automatically moves to the **Process Time (PT)** setting.

Process Time (PT) Parameter

- **Key1 (Increment):** Increases the Pause Time value.
- **Key2 (Decrement):** Decreases the Pause Time value.
- **Timeout / No Key Action:** If no key is pressed for 2 seconds, the system exits the settings menu and returns to the **Home Screen**.